World Journal of Engineering Research
Print ISSN: 2959-9865
Online ISSN: 2959-9873
DOI: https://doi.org/10.61784/wjer3032

MEASUREMENT OF THE CENTER OF GRAVITY OF A WATER BASED UAV BASED ON THE TWO-POINT SUSPENSION METHOD

ShuHang Peng*, Hang Zhang
Wuhan R&D Center, China Special Vehicle Research Institute, Wuhan 430070, Hubei, China.
Corresponding Author: ShuHang Peng, Email: pengsh006@avic.com

Abstract: Addressing the limitations of traditional jack suspension methods, which are unsuitable for water based UAV without landing gear, and the challenges of obtaining the center of gravity height position of water based UAV using the two-point suspension method, this paper proposes reading the force sensor readings at two suspension points under different small pitch angles and simplifying the torque equation through coordinate transformations. Based on this, the optimal estimates of the center of gravity position are calculated using the Fermat method and the least squares method, respectively. The results indicate that, while maintaining the same experimental costs and operational difficulty, the method proposed in this paper reduces experimental errors and improves the effectiveness and accuracy of center of gravity calculations for UAVs.
Keywords: Two-point suspension method; Water based UAV; Coordinate transformation; Fermat's method; Least squares method

1 INTRODUCTION

In the design process of unmanned aerial vehicles (UAVs), the center of gravity (COG) is a critical focus for designers [1-2], spanning the entire research, development, production, testing, and operational phases [3-7]. Due to various unfavorable factors such as theoretical weight errors during design, manufacturing errors in parts production, and assembly errors during final assembly, the actual center of gravity position of an UAV often deviates from the designed center of gravity position after it rolls off the production line. However, the center of gravity position has a significant impact on flight control program development, flight safety, and quality [8-13]. Therefore, the center of gravity must be calculated and calibrated before UAV test flights and delivery. Currently, commonly used methods for calculating the center of gravity of aircraft include the jack measurement method and the suspension method [4]. The hull of a water based UAV consists of the upper hull above the waterline and the lower hull below the waterline, with the lower hull having a “V”-shaped cross-section. The jack measurement method cannot be directly applied, so the suspension method is generally used to calculate the weight center of gravity of water based UAVs.
This paper employs the two-point suspension method to obtain force sensor readings at different pitch angles, simplifies the torque equation by changing the reference frame, and uses different fitting methods to calculate the optimal estimate of the center of gravity position. It explores a low-cost, easy-to-operate method for calculating the center of gravity of unmanned aerial vehicles and processing experimental data.

2 CALCULATION PRINCIPLES AND ERROR CORRECTION

2.1 Calculation Principle of Center of Gravity Calculation Method

As shown in Figure 1, this is the force situation of the UAV in the absolute coordinate system $x_gO_gy_g$ when the pitch angle is α (in the situation shown in the figure, the pitch angle is positive, so $\alpha > 0$).

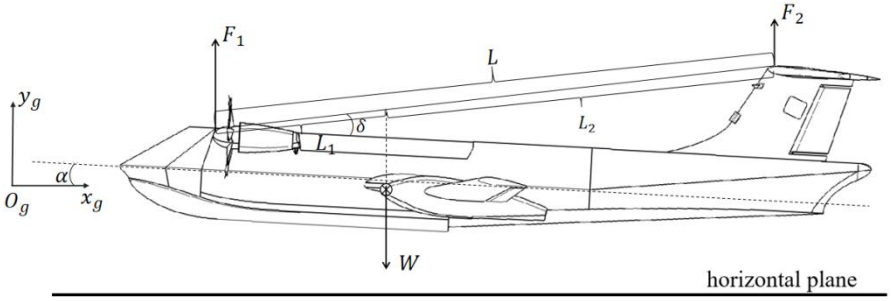


Figure 1 Force Diagram of the UAV

© By the Author(s) 2025, under the CC BY-NC-ND license (http://creativecommons.org/licenses/by-nc-nd/4.0).

In Figure 1, F_1 and F_2 represent the readings of the tension gauges at the front and rear suspension points, respectively. W represents the weight of the UAV, L represents the distance between the front and rear suspension points, δ represents the angle between the line connecting the front and rear suspension points and the aircraft's centerline, L_1 and L_2 represent the distances from the front and rear suspension points on the suspension line to the line of gravity, respectively. In an absolute coordinate system $x_gO_gy_g$, the equilibrium equation can be expressed as:

$$\begin{cases} F_1 + F_2 = W \\ F_1 \cdot L_1 = F_2 \cdot L_2 \\ L_1 + L_2 = L \end{cases} \tag{1}$$

In equation (1), the weight of the UAV is taken as the average value of N times horizontal measurements:

$$W = \frac{1}{N}\sum_{i=1}^{N}\left(F_{1,i} + F_{2,i}\right) \tag{2}$$

According to equation (1), we can conclude that:

$$L_1 = \frac{F_2 \cdot L}{W}, L_2 = \frac{F_1 \cdot L}{W} \tag{3}$$

From equation (3), we can determine the position of the center of gravity on the fuselage axis, but we cannot determine its position in terms of fuselage height.

To further determine the position of the center of gravity in terms of fuselage height, multiple sets of data can be measured under various pitch angles, and the equations can be solved simultaneously. However, directly setting up equations in the absolute coordinate system $x_gO_gy_g$ results in nonlinear terms. To simplify the equations for easier solution, the reference frame can be transformed into a fixed reference frame centered at the front suspension point on the fuselage, as shown in Figure 2. The x-axis of this reference frame coincide with the line connecting the suspension points pointing backward, and the y-axis is perpendicular to the x-axis pointing upward. Let the coordinates of the origin O of the suspension point coordinate system xOy in the absolute coordinate system $x_gO_gy_g$ be (x_{GO}, y_{GO}), then the coordinate transformation rule between the absolute coordinate system $x_gO_gy_g$ and the suspension point coordinate system xOy is:

$$\begin{bmatrix} x_G \\ y_G \end{bmatrix} = \begin{bmatrix} \cos\delta & -\sin\delta \\ \sin\delta & \cos\delta \end{bmatrix} \begin{bmatrix} x \\ y \end{bmatrix} + \begin{bmatrix} x_{GO} \\ y_{GO} \end{bmatrix} \tag{4}$$

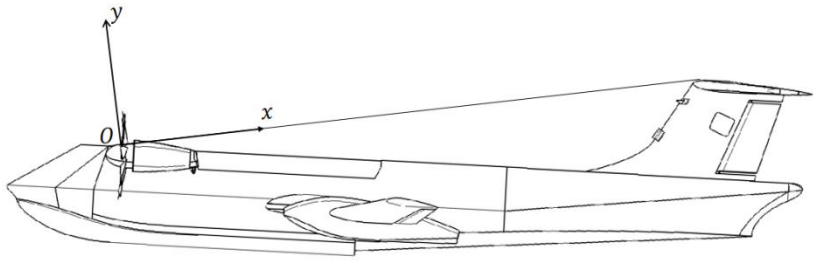


Figure 2 Diagram of Suspension Point Coordinate System

Figure 3 shows the force conditions of the UAV during two measurements in the suspension point coordinate system. When the suspension point coordinate system is used as the stationary reference system, the UAV remains stationary in the suspension point coordinate system when the aircraft pitch angle α is changed, while the angle θ between the direction of the tension gauge and the x-axis of the suspension point coordinate system changes with the pitch angle α. Their relationship is as follows:

$$\theta = 90° - \alpha - \delta \tag{5}$$

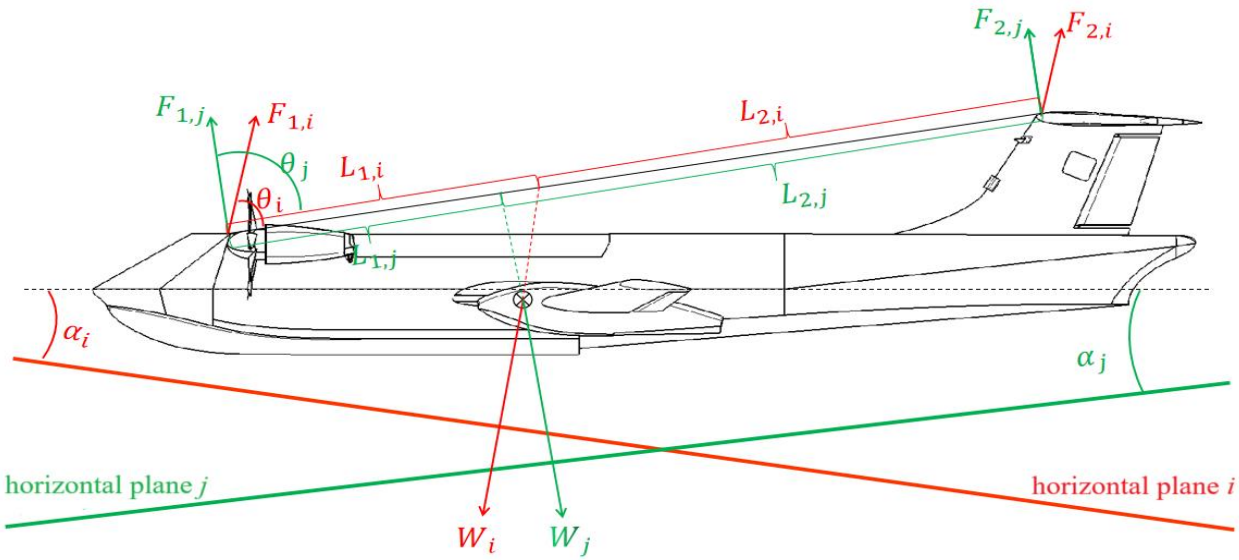


Figure 3 Force Conditions on the UAV during Two Measurements in the Suspension Point Coordinate System

Similarly to equation (3), the following relationship can be written:

$$\begin{cases} L_{1,i} = \dfrac{F_{2,i} \cdot L}{W}, L_{2,i} = \dfrac{F_{1,i} \cdot L}{W} \\ L_{1,j} = \dfrac{F_{2,j} \cdot L}{W}, L_{2,j} = \dfrac{F_{1,j} \cdot L}{W} \end{cases} \tag{6}$$

Furthermore, as can be seen from Figure 3, in the suspension point coordinate system, since the UAV remains stationary relative to the suspension point coordinate system, the position of the center of gravity at each measurement is independent of the pitch angle at that time, i.e., the gravity lines obtained from each measurement intersect at the same point, and that point is the center of gravity.

Based on Figure 3 and Equation (6), the intercepts b_i and b_j of the gravity lines on the x-axis at the two measurement times are:

$$\begin{cases} b_i = \dfrac{F_{2,i} \cdot L}{W} \\ b_j = \dfrac{F_{2,j} \cdot L}{W} \end{cases} \tag{7}$$

From Figure 2, we can see that the slopes of the two gravity lines measured are $k_i = \tan\theta_i$ and $k_j = \tan\theta_j$, respectively. Therefore, we can write the linear equations of the two gravity lines:

$$\begin{cases} l_i = \left(x - \dfrac{F_{2,i} \cdot L}{W} \right) \cdot \tan\theta_i \\ l_j = \left(x - \dfrac{F_{2,j} \cdot L}{W} \right) \cdot \tan\theta_j \end{cases} \tag{8}$$

Solving the system of equations (8), we obtain the coordinates (x_C, y_C) of the center of gravity in the suspension point coordinate system as:

$$\begin{cases} x_C = \dfrac{L\left(F_{2,i}\tan\theta_i - F_{2,j}\tan\theta_j\right)}{W\left(\tan\theta_i - \tan\theta_j\right)} \\ y_C = \dfrac{L\left(F_{2,i} - F_{2,j}\right)\tan\theta_i \tan\theta_j}{W\left(\tan\theta_i - \tan\theta_j\right)} \end{cases} \tag{9}$$

Substituting equation (9) into equation (4) yields the coordinates $(x_{C,G}, y_{C,G})$ of the center of gravity in the absolute coordinate system:

$$\begin{bmatrix} x_{C,G} \\ y_{C,G} \end{bmatrix} = \begin{bmatrix} \cos\delta & -\sin\delta \\ \sin\delta & \cos\delta \end{bmatrix} \begin{bmatrix} x_C \\ y_C \end{bmatrix} + \begin{bmatrix} x_{GO} \\ y_{GO} \end{bmatrix} \tag{10}$$

2.2 Correction of Raw Data

During the experiment, the UAV was suspended from a gantry frame by two suspension cables. Ideally, the two cables should be parallel to each other and perpendicular to the ground. However, during the actual experiment, due to changes

in the UAV's pitch angle, the horizontal distance between the two suspension points on the UAV also underwent minor changes, causing the two cables to neither be parallel to each other nor perpendicular to the ground. However, the angle deviation between the cables and the vertical direction was ignored in the aforementioned calculations. The current revision addresses the impact of the deviation angle of the suspension cables on experimental results when the pitch angle is non-zero.

When the UAV is at a non-zero pitch angle, its force diagram in the absolute coordinate system is shown in Figure 4. In Figure 4, γ_i indicates the deviation angle between F_i and the vertical direction at this time.

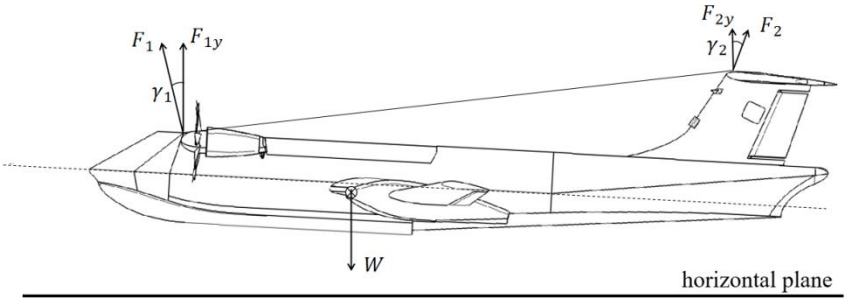


Figure 4 Force Diagram of a UAV at a Non-Zero Pitch Angle

$$\begin{cases} F_1\cos\gamma_1 + F_2\cos\gamma_2 = W \\ F_1\sin\gamma_1 = F_2\sin\gamma_2 \end{cases} \tag{11}$$

Based on the force diagram, the equilibrium equation can be listed as follows:

When the pitch angle is taken as 0°, substitute the measured W into equation (11).:

$$\cos\gamma_1 = \frac{F_1^2 + W^2 - F_2^2}{2F_1W}, \cos\gamma_2 = \frac{F_2^2 + W^2 - F_1^2}{2F_2W} \tag{12}$$

Then, calculate using the corrected original data $F_{1y} = F_1\cos\gamma_1, F_{2y} = F_2\cos\gamma_2$ and substitute it into equations (9) and (10).

3 EXPERIMENTAL DATA PROCESSING METHODS

If a total of N pitch angles are selected for weighing, a total of C_N^2 equations similar to Equation (8) can be obtained. Solving these equations yields C_N^2 sample points, which are denoted as $(x_k, y_k), k \in [1, C_N^2]$. Due to the existence of errors, these C_N^2 sample points do not coincide.

3.1 Calculating the Estimated Center of Gravity Position using the Feynman Method

Let the true value of the center of gravity coordinates be (x_0, y_0), and the distance from the k th sample point to the center of gravity be:

$$d_k(x_0, y_0) = \sqrt{(x_0 - x_k)^2 + (y_0 - y_k)^2} \tag{13}$$

The sum of the distances from each sample point to the center of gravity is:

$$D_1(x_0, y_0) = \sum_{k=1}^{C_N^2} d_k(x_0, y_0) = \sum_{k=1}^{C_N^2} \sqrt{(x_0 - x_k)^2 + (y_0 - y_k)^2} \tag{14}$$

According to Fermat's principle, the value of $(\hat{x}_0, \hat{y}_0)$ that minimizes D_1 is considered to be the best estimate of (x_0, y_0). Take the second-order partial derivative of the function $D_1(x_0, y_0)$ in equation (14):

$$\begin{cases} \dfrac{\partial^2 D_1}{\partial x_0^2} = \displaystyle\sum_{k=1}^{C_N^2} \dfrac{(y_0 - y_k)^2}{\left[\sqrt{(x_0 - x_k)^2 + (y_0 - y_k)^2}\right]^3} \\ \dfrac{\partial^2 D_1}{\partial x_0 \partial y_0} = \displaystyle\sum_{k=1}^{C_N^2} \dfrac{(x_0 - x_k)(y_0 - y_k)}{\left[\sqrt{(x_0 - x_k)^2 + (y_0 - y_k)^2}\right]^3} \\ \dfrac{\partial^2 D_1}{\partial y_0^2} = \displaystyle\sum_{k=1}^{C_N^2} \dfrac{(x_0 - x_k)^2}{\left[\sqrt{(x_0 - x_k)^2 + (y_0 - y_k)^2}\right]^3} \end{cases} \tag{15}$$

The critical point discriminant of $D_1(x_0, y_0)$ can be written from equation (15) as:

$$\left(\frac{\partial^2 D_1}{\partial x_0 \partial y_0}\right)^2 - \frac{\partial^2 D_1}{\partial x_0^2}\frac{\partial^2 D_1}{\partial y_0^2} = \left\{\sum_{k=1}^{C_N^2} \frac{(x_0 - x_k)(y_0 - y_k)}{[d_k(x_0, y_0)]^3}\right\}^2 - \sum_{k=1}^{C_N^2} \frac{(x_0 - x_k)^2}{[d_k(x_0, y_0)]^3} \cdot \sum_{k=1}^{C_N^2} \frac{(y_0 - y_k)^2}{[d_k(x_0, y_0)]^3} \tag{16}$$

According to Cauchy's inequality, equation (16) is always less than 0. Considering that the second derivative is always greater than 0, the minimum value of $D_1(x_0, y_0)$ is obtained at the zero point of the first partial derivative.

$$\begin{cases} \dfrac{\partial D_1}{\partial x_0} = \displaystyle\sum_{k=1}^{C_N^2} \dfrac{x_0 - x_k}{\sqrt{(x_0 - x_k)^2 + (y_0 - y_k)^2}} = 0 \\ \dfrac{\partial D_1}{\partial y_0} = \displaystyle\sum_{k=1}^{C_N^2} \dfrac{y_0 - y_k}{\sqrt{(x_0 - x_k)^2 + (y_0 - y_k)^2}} = 0 \end{cases} \tag{17}$$

Perform an identity transformation on (17):

$$x_0 = \frac{\displaystyle\sum_{k=1}^{C_N^2} \frac{x_k}{\sqrt{(x_0 - x_k)^2 + (y_0 - y_k)^2}}}{\displaystyle\sum_{k=1}^{C_N^2} \frac{1}{\sqrt{(x_0 - x_k)^2 + (y_0 - y_k)^2}}}, y_0 = \frac{\displaystyle\sum_{k=1}^{C_N^2} \frac{y_k}{\sqrt{(x_0 - x_k)^2 + (y_0 - y_k)^2}}}{\displaystyle\sum_{k=1}^{C_N^2} \frac{1}{\sqrt{(x_0 - x_k)^2 + (y_0 - y_k)^2}}} \tag{18}$$

Equation (18) satisfies the typical form of general iterative methods and can be rewritten as the following iterative equation:

$$x_0^{(p+1)} = \varphi_x\left(x_0^{(p)}, y_0^{(p)}\right), y_0^{(p+1)} = \varphi_y\left(x_0^{(p)}, y_0^{(p)}\right) \tag{19}$$

Select appropriate initial value $\left(x_0^{(0)}, y_0^{(0)}\right)$ and control accuracy ε. When the accuracy requirements meet $\left(x_0^{(p)} - x_0^{(p+1)}\right)^2 + \left(y_0^{(p)} - y_0^{(p+1)}\right)^2 \le \varepsilon^2$, the center of gravity position $\left(x_0^{(p+1)}, y_0^{(p+1)}\right)$ is considered to be the optimal estimated coordinate in the suspension point coordinate system.

3.2 Calculating the Estimated Center of Gravity Position Using the Least Squares Method

From equation (13), the distance from the k th sample point to the center of gravity is $d_k(x_0, y_0) = \sqrt{(x_0 - x_k)^2 + (y_0 - y_k)^2}$. The sum of the squares of the distances from each sample point to the center of gravity is:

$$D_2(x_0, y_0) = \sum_{k=1}^{C_N^2} d_k^2(x_0, y_0) = \sum_{k=1}^{C_N^2} \left[(x_0 - x_k)^2 + (y_0 - y_k)^2\right] \tag{20}$$

According to the principle of least squares, the value of $(\hat{x}_0, \hat{y}_0)$ that minimizes D_2 is considered to be the best estimate of (x_0, y_0). Calculate the second-order partial derivative of the function $D_2(x_0, y_0)$ in equation (20):

$$\begin{cases} \dfrac{\partial^2 D_1}{\partial x_0^2} = 2C_N^2 \\ \dfrac{\partial^2 D_1}{\partial x_0 \partial y_0} = 0 \\ \dfrac{\partial^2 D_1}{\partial y_0^2} = 2C_N^2 \end{cases} \tag{21}$$

Obviously, the discriminant of the extreme point of $D_2(x_0, y_0)$ is negative and the two second-order partial derivatives are greater than 0, then the zero point of the first-order derivative is the minimum point of the original function. Let:

$$\begin{cases} \dfrac{\partial D_1}{\partial x_0} = 2C_N^2 \cdot x_0 - 2\sum_{k=1}^{C_N^2} x_k = 0 \\ \dfrac{\partial D_1}{\partial y_0} = 2C_N^2 \cdot y_0 - 2\sum_{k=1}^{C_N^2} y_k = 0 \end{cases} \tag{22}$$

It can be seen that under the least squares criterion, the optimal estimate of the center of gravity is the arithmetic mean of each sample point:

$$x_0 = \frac{1}{C_N^2}\sum_{k=1}^{C_N^2} x_k, y_0 = \frac{1}{C_N^2}\sum_{k=1}^{C_N^2} y_k \tag{23}$$

4 PRACTICAL APPLICATIONS AND EXAMPLES

In the center of gravity calculation experiment for a certain type of surface unmanned aerial vehicle, the readings of the front suspension point force gauge F_1 and rear suspension point force gauge F_2 were taken within a pitch angle range of -3.0° to 3.0°, with readings recorded every 0.5°, resulting in N = 13 sets of data. Three experiments were conducted, and the average values obtained are shown in Table 1.

Table 1 Weight Record Table

Item	1	2	3	4	5	6	7	8	9	10	11	12	14
$\alpha(°)$	-3.0	-2.5	-2.0	-1.5	-1.0	-0.5	0.0	0.5	1.0	1.5	2.0	2.5	3.0
F_1/W	0.639	0.64	0.642	0.643	0.643	0.645	0.645	0.646	0.648	0.649	0.652	0.653	0.639
F_2/W	0.365	0.364	0.362	0.359	0.358	0.356	0.355	0.354	0.353	0.352	0.352	0.351	0.365

Based on the 13 sets of data in Table 1, $C_{13}^2 = 78$ sample points $(x_k, y_k), k \in [1,78]$ can be obtained using Equation (9).

Using the Fermat method to process the coordinate data of the 78 sample points, the estimated coordinates of the center of gravity in the suspension point coordinate system are obtained as $\hat{x}_0$ = 1226.670 mm and $\hat{y}_0$ = -560.231 mm. Substituting these estimated values into Equation (10), the estimated coordinates of the center of gravity in the absolute coordinate system are obtained as $\hat{x}_{C,G}$ = 2413.913 mm and $\hat{y}_{C,G}$ = -67.594 mm.

Using the least squares method to process the coordinate data of the 78 sample points, the estimated coordinates of the center of gravity in the suspension point coordinate system are obtained as $\hat{x}_0$ = 1227.668 mm and $\hat{y}_0$ = -545.851 mm. Substituting these estimated values into equation (10), the estimated coordinates of the center of gravity in the absolute coordinate system are obtained as $\hat{x}_{C,G}$ = 2412.494 mm and $\hat{y}_{C,G}$ = -53.249 mm.

Comparing the results of the two calculation methods, the estimated results for the horizontal coordinate show a small difference of 0.13% MAC, indicating good agreement; the estimated results for the vertical coordinate differ by 1.31% MAC, showing a larger difference compared to the horizontal coordinate.

The data in Table 1 is corrected according to $F_{1y} = F_1 \cos\gamma_1, F_{2y} = F_2 \cos\gamma_2$, the results are shown in Table 2:

Table 2 Corrected Weight Data

Item	1	2	3	4	5	6	7	8	9	10	11	12	14
α(°)	-3.0	-2.5	-2.0	-1.5	-1.0	-0.5	0.0	0.5	1.0	1.5	2.0	2.5	3.0
F_{1y}/W	0.638	0.639	0.641	0.642	0.643	0.644	0.645	0.646	0.647	0.649	0.651	0.652	0.653
F_{2y}/W	0.362	0.361	0.359	0.359	0.357	0.356	0.355	0.354	0.353	0.351	0.349	0.348	0.347

Using the data from Table 2 in the calculation, the following results are obtained:
Using the Fermat method, the estimated coordinates of the center of gravity in the suspension point coordinate system are $\hat{x}_0$ =1234.385 mm and $\hat{y}_0$ =-513.925 mm; in the absolute coordinate system, the estimated values are $\hat{x}_{C,G}$ =2413.782 mm and $\hat{y}_{C,G}$ =-20.650 mm.
Using the least squares method, the estimated coordinates of the center of gravity in the suspension point coordinate system are $\hat{x}_0$ =1234.192 mm and $\hat{y}_0$ =-515.465 mm; in the absolute coordinate system, the estimated values are $\hat{x}_{C,G}$ =2413.850 mm and $\hat{y}_{C,G}$ =-22.200 mm.
After data correction, comparing the estimated values from the two calculation methods, the horizontal coordinate difference is 0.02% MAC, and the vertical coordinate difference is 0.14% MAC.
As shown in Table 3, the following are the calculated results of the center of gravity estimated values before and after data correction:

Table 3 Calculation Results of Center of Gravity Estimates Before and After Data Correction

	Coordinate	Fermat's method	Least squares method	Difference
Before correction	$\hat{x}_{C,G}$(mm)	2413.913	2412.494	0.13%MAC
	$\hat{y}_{C,G}$(mm)	-67.594	-53.249	1.31%MAC
After correction	$\hat{x}_{C,G}$(mm)	2413.782	2413.850	0.02%MAC
	$\hat{y}_{C,G}$(mm)	-20.650	-22.200	0.14%MAC

Comparing the data in Table 3, there is no significant difference between the two methods in terms of the horizontal coordinate values, but there is a large difference in the vertical coordinate values. At the same time, it was found that the difference between the estimated values calculated based on the corrected data is smaller than the difference between the coordinate estimates calculated based on the original data. That is, based on the corrected data, the two different methods produce better agreement in terms of the estimated center of gravity position. In addition, the variances of the sample point coordinates before and after correction were calculated separately, and the results are shown in Table 4:

Table 4 Variance of Sample Point Coordinates Before and After Data Correction

	Horizontal coordinate variance $\sigma^2(x)(\mathrm{mm}^2)$	Vertical coordinate variance $\sigma^2(y)(\mathrm{mm}^2)$
Before correction	969.047	32733.618
After correction	231.718	7547.947

As can be seen from Table 4, the variance of the x and y coordinates of the corrected sample points has been optimized compared to the uncorrected values. The improved agreement between the two methods and the reduced variance of the sample point coordinates indicate that the correction method proposed in this paper has improved data quality and computational accuracy.

5 CONCLUSION

This paper is based on the two-point suspension method. At different pitch angles of the UAV, multiple sets of data are measured and recorded, then corrected. After converting the coordinate system, the torque equation is derived and solved. The estimated values of the UAV's center of gravity axial position and height position can be calculated using the Fermat method or the least squares method. The results show that the error in the center of gravity estimates obtained using different methods can be as low as 0.1% MAC.
With the increasing civilian development of China's maritime areas and changes in the maritime situation in recent years, the prospects for surface UAVs are becoming increasingly broad, and production will also grow accordingly. Weight and center of gravity measurement is a necessary process before and after the design, manufacturing, use, and maintenance of surface UAVs. The weight and center of gravity measurement method proposed in this paper has a clear and straightforward principle, a simple calculation process, easy weighing operations, low experimental costs, and high calculation accuracy. It has significant practical value and guiding significance for the weight and center of gravity measurement work of water based UAVs.

COMPETING INTERESTS

The authors have no relevant financial or non-financial interests to disclose.

REFERENCES

[1] Wang Gang, Hu Yu, Song Bifeng. Optimal design of tailless UAV considering uncertainty of center of gravity position. Acta Aeronautica Sinica, 2015, 36(07): 2214-2224.
[2] Nursultan I, Sumil S, Dogan K, et al. Design, development and experimental validation of a lightweight dual-arm aerial manipulator with a COG balancing mechanism. Mechatronics, 2022(82): 102719.
[3] Feng Dongyun. Application of aircraft weighing equipment in aviation maintenance. Measurement and Testing, 2011(Supplement): 250-251.
[4] Jiang Dianxiang, Liu Zhuo, Lin Ziping. Research on the measurement method of aircraft weight and center of gravity. Trainer Aircraft, 2011(3).
[5] Raymer D. Aircraft Design,A Conceptual Approach. AIAA Education, 2014, 9(1): 78.
[6] Darvishpoor S, Roshanian J, Raissi A, et al. Configurations, flight mechanisms, and applications of unmanned aerial systems: A review. Progress in Aerospace Sciences, 2020(121): 100694.
[7] Aakif M, Asif I, Ahmad Y. Application specific drone simulators: Recent advances and challenges. Simulation Modelling Practice and Theory, 2019(94): 100-117.
[8] Huang Wei. A brief discussion on the impact of aircraft weight balance on flight safety. China Science and Technology Expo, 2015(037): 343.
[9] Li Wenqiang, Zhang Zhengji. Current status and development trend of aircraft weight and center of gravity measurement technology. Weighing Instrument, 2016, 45(4): 8-11.
[10] Dai Shilong. Aircraft weight and center of gravity measurement. Heilongjiang Science and Technology Information, 2013(7): 95.
[11] Liu Bin. Application and development of aircraft weight and center of gravity measurement technology. Aviation Maintenance and Engineering, 2004(1): 53-57.
[12] Jing S, Guangtong X, Zhu W, et al. Safe flight corridor constrained sequential convex programming for efficient trajectory generation of fixed-wing UAVs. Chinese Journal of Aeronautics, 2025(38): 103174.
[13] Lingling C, Qi L, Feng G, et al. Design, modeling, and control of morphing aircraft: A review. Chinese Journal of Aeronautics, 2022(35): 220-246.